AQUA CHEM GLOBAL WATER SOLUTIONS

WASTE HEAT WATERMAKERS - SEAWATER PLATE DISTILLERS

Aqua-Chem is well known in the Oil and Gas / Marine industry for supplying seawater distillers that use waste heat from diesel engine jacket water or other sources to desalinate seawater. In many cases, this wasted energy can be used to make water with little or no additional energy input. Our waste heat units are in service on offshore oil rigs, naval vessels and merchant ships and have provided years of efficient service. These units consistently produce purified water with less than 5 ppm of total dissolved solids.

SPD13 Series Watermaker I SPD35 Series Watermaker

DESIGN FEATURES

HEAT SOURCE – Diesel engine jacket cooling water is used to supply heat to the unit. Use of waste heat requires little or no additional energy input. If necessary, supplemental steam or electric heat can be provided to compensate for insufficient heat during low engine load operations.

MATERIALS OF CONSTRUCTION – We use corrosion-resistant duplex stainless steel, copper-nickel and stainless steel for the shell and piping, and titanium plate packs for the heat exchanger.

AUTOMATION – Watermakers are designed for simplicity of operation. Units are controlled by manual startup and shutdown with automatic operation. Product water is continuously monitored with automatic diversion if salinity exceeds programmed limits.

ELECTRICALS – We use ATEX, IEC and CE designs.

ACCESSORIES / OPTIONS – Remineralizers, hydrophores, booster pumps, UV sterilizers, electric heaters and other options are available on request.

SERVICE

We provide service and support for our equipment, even decades after installation. We continue to support units that were installed in the 1970s and 1980s. We maintain inventories of key components and consumables – and ensure that our service advisors are readily available for technical support via phone or e-mail.

1-800-964-7034 • 865-544-2065 • service@aqua-chem.com

BENEFITS

- Compact units with simple operation, only one pump is required to operate.
- Use of waste heat requires little or no additional energy input.
- Low-temperature operation reduces corrosion and scaling potential.
- Custom engineering is available to meet international electrical codes, rig specifications and unique operating conditions.
- Unit operates automatically after startup with minimal supervision.
- We offer easy, low-cost installation, with only five piping connections and one electrical connection.
- Aqua-Chem uses reliable and durable materials with proven performance after more than four decades of offshore use by our company.
- DNV / ABS / NR-13 compliance.
- Double-effect watermakers are also available when waste heat availability is limited.
- Our designs are factory tested to ensure trouble-free startup.

HOW AQUA-CHEM SEAWATER PLATE DISTILLERS WORK

Seawater first passes through the condenser on one side of each plate in the upper plate pack. It condenses the water vapor into distilled water on the other side of each plate.

About 10 percent of incoming seawater is then diverted to the evaporator or lower plate pack of the distiller.

The heating water from the waste heat source passes through the evaporator and heats the seawater to boiling. Since the unit operates at a vacuum, the seawater boils at 50° C to 60° C.

The water vapor rises toward the top of the unit and passes through a wire mesh mist eliminator before entering the upper plate pack and condensing into distilled water.

Distilled water collected in the upper plate pack drains to the distillate pump. Before being pumped to the storage tank, the conductivity is continuously monitored and automatically dumps to drain if the conductivity is too high.

The bulk of the seawater flows through the educator. The seawater drives this suction device, which draws vacuum, removes air and gases from the water vapor and removes concentrated seawater from the bottom of the distiller.

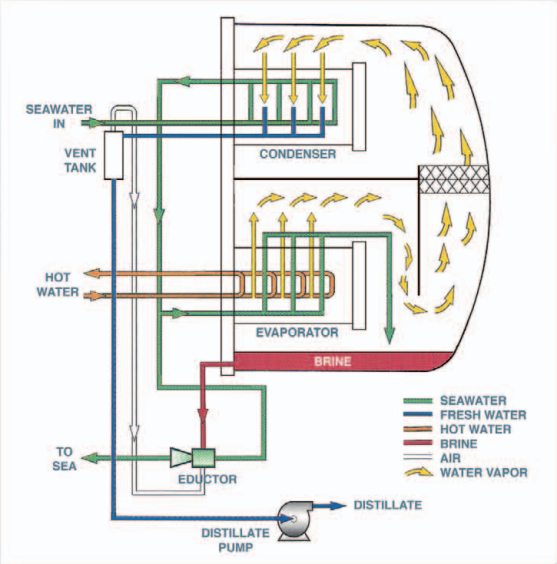

Waste Heat Watermakers - Seawater Plate Distillers

EQUIPMENT CHARACTERISTICS

MODEL	CAPACITY (m^3/day)	Heat Required (kw)	DIMENSIONS (FT / MM)			WEIGHT (LBS / KG)
			LENGTH	WIDTH	HEIGHT	
SINGLE EFFECT (two plate packs)						
SPD13-10	10	350	3.6 / 1,100	4.2 / 1,300	5.2 / 1,600	1,102 / 500
SPD13-25	25	750	4.6 / 1,400	4.2 / 1,300	5.2 / 1,600	1,212 / 550
SPD22-30	30	1,050	3.9 / 1,200	5.2 / 1,600	5.6 / 1,700	2,204 / 1,000
SPD35-40	40	1,400	5.6 / 1,700	5.2 / 1,600	7.9 / 2,400	3,086 / 1,400
SPD35-50	50	1,750	5.6 / 1,700	5.2 / 1,600	7. 9 / 2,400	3,306 / 1,500
SPD35-60	60	2,100	6.6 / 2,000	5.2 / 1,600	7. 9 / 2,400	4,188 / 1,900
DOUBLE EFFECT (three plate packs)						
SPD235-40	40	1,000	7.9 / 2,400	5.9 / 1,800	10.5 / 3,200	5,952 / 2,700
SPD235-60	60	1,400	9.2 / 2,800	5.9 / 1,800	10.5 / 3,200	6,393 / 2,900

SPD35 Series Watermaker with steam heating loop

AQUA CHEM
GLOBAL WATER SOLUTIONS

Aqua-Chem, Inc. • 3001 East Gov. John Sevier Hwy • Knoxville, TN 37914 USA • (865) 544-2065 • (800) 964-7034